**Lesson-8**

**Mechanical Separation: Fundamentals Involved in Separation**

## 8.1 INTRODUCTION

Separation is one of the important unit operations practiced in Dairy and Food processing. Some of the physical separation processes are Sieving, Filtration, Membrane separation, Gravity separation, Centrifugal Separation etc. They may also be classified broadly into categories of Liquid- Liquid, Liquid – Gas, Solid – Solid, Solid- Gas separations. Each operation would involve specific application for separation.

Some of the common operations in dairy industry are the separation of fat from milk, separation of extraneous matter from milk, separation of fine powder particles from exhaust air of spray drier, filtering moisture from various dairy products etc.

Filtration is the process of passing a fluid containing suspended particles through a porous medium. The medium traps the suspended solids producing a clarified filtrate. Filtration is employed when the valuable component of the mixture is the filtrate.

## 8.2 GAS-SOLID SEPARATIONS

Gas-Solid separation involves the application of particle mechanics to the design and application of dust-collection systems. It includes wet collectors, or scrubbers, for particle collection. It could involve equipment for removing entrained liquid mist from gases.

### 8.2.1 Purpose of dust collection

Dust collection is concerned with the removal or collection of solid dispersed in gases for purposes of:

1. Air-pollution control, as in fly-ash removal from power-plant flue gases
2. Equipment-maintenance reduction, as in filtration of engine intake air.
3. Safety or health-hazard elimination, as in collection of siliceous and metallic dusts around grinding and drilling equipment and in some metallurgical operations and flour dusts from milling or bagging operations

4. Product-quality improvement, as in air cleaning in the production of pharmaceutical products and photographic film

5. Recovery of a valuable product, as in collection of dusts from dryers and smelters

6. Powdered-product collection, as in pneumatic conveying; the spray drying of milk, eggs, detergent and the manufacture of high purity zinc oxide and carbon black

Measurements of the concentrations and characteristics of dust dispersed in air or other gases may be necessary (1) to determine the need for control measures, (2) to establish compliance with legal requirements, (3) to obtain information for collector design, and (4) to determine collector performance.

The basic operations in dust collection by any device are (1) separation of the gas-borne particles from the gas stream by deposition on a collecting surface; (2) retention of the deposit on the surface; and (3) removal of the deposit from the surface for recovery or disposal. The separation step requires (1) application of a force that produces a differential motion of a particle relative to the gas and (2) a gas retention time sufficient for the particle to migrate to the collecting surface. The principal mechanisms of aerosol deposition that are applied in dust collectors are (1) gravitational deposition, (2) flow-line interception, (3) inertial deposition, (4) diffusional deposition, and (5) electrostatic deposition.

**8.2.2 Cyclone separators**

The most widely used type of dust collection equipment is the cyclone, in which dust-laden gas enters a cylindrical or conical chamber tangentially at one or more points and leaves through a central opening . The dust particles, by virtue of their inertia, will tend to move toward the outside separator wall, from which they are led into a receiver. A cyclone is essentially a settling chamber in which gravitational acceleration is replaced by centrifugal acceleration. At operating conditions commonly employed, the centrifugal separating force or acceleration may range from 5 times gravity in very large diameter, low-resistance cyclones, to 2500 times gravity in very small, high-resistance units. The immediate entrance to a cyclone is usually rectangular.

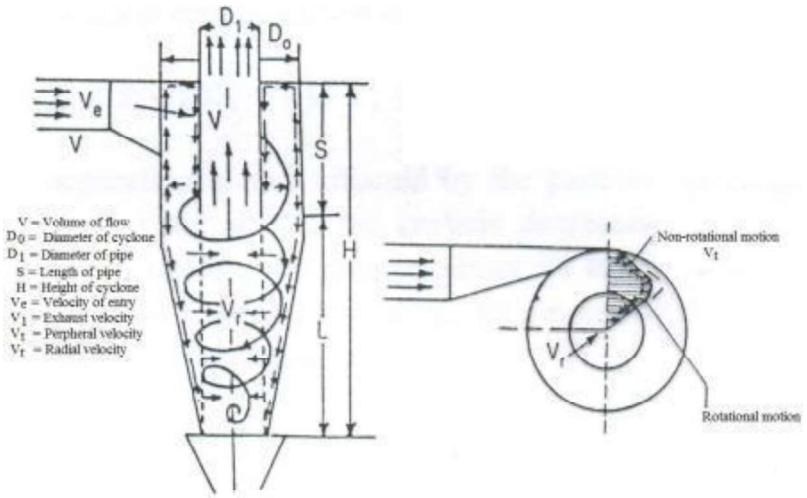


**Fig.8.1 Cyclone separator**

### 8.2.3 Venturi scrubbers

The venturi scrubber is one of the most widely used types of particulate scrubbers. The designs have become generally standardized, and units are manufactured by a large number of companies. Venturi scrubbers may be used as either high- or low energy devices but are most commonly employed as high-energy units. The units originally studied and used were designed to the proportions of the classical venturis used for metering, but since it was discovered that these proportions have no special merits, simpler and more practical designs have been adopted. Most "venturi" contactors in current use are in fact not venturis but variable orifices of one form or another. Any of a wide range of devices can be used, including a simple pipe-line contactor. Although the venturi scrubber is not inherently more efficient at a given contacting power than other types of devices, its simplicity and flexibility favor its use. It is also useful as a gas absorber for relatively soluble gases, but because it is a concurrent contactor, it is not well suited to absorption of gases having low solubilities.

Current designs for venturi scrubbers generally use the vertical down flow of gas through the venturi contactor and incorporate three features:

(1)a "wet-approach" or "flooded-wall" entry section, to avoid dust buildup at a wet-dry junction; (2) an adjustable throat for the venture (or orifice), to provide for adjustment of the pressure drop; and (3) a "flooded elbow" located below the venturi and ahead of the entrainment separator, to reduce wear by abrasive particles. The venturi throat is sometimes fitted with a refractory lining to resist abrasion by dust particles.

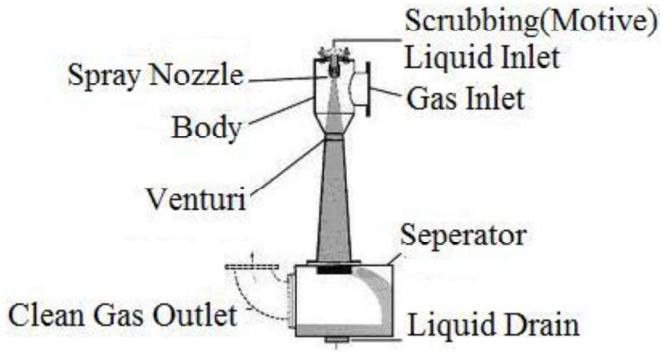


**Fig.8.2 Venturi Scrubber**

## 8.3 LIQUID – SOLID SEPARATIONS

These operations involve, the unit operations like Crystallization, Leaching, Gravity sedimentation, Filtration, Centrifugal separation etc. Of these Filtration and Centrifugal separation involve mechanical action in separation.

Sedimentation is the partial separation or concentration of suspended solid particles from a liquid by gravity settling. This field may be divided into the functional operations of thickening and clarification. The primary purpose of thickening is to increase the concentration of suspended solids in a feed stream, while that of clarification is to remove a relatively small quantity of suspended particles and produce a clear effluent. These two functions are similar and occur simultaneously and the terminology merely makes a distinction between the desired primary process results. Generally, thickener mechanisms are designed for the heavier-duty requirements imposed by a large quantity of relatively concentrated pulp, while clarifiers usually will include features that ensure essentially complete suspended-solids removal, such as greater depth, special provision for coagulation or flocculation of the feed suspension, and greater overflow-weir length.

### 8.3.1 Clarifiers

Continuous clarifiers are generally employed with dilute suspensions, principally industrial process streams and domestic municipal wastes, and their primary purpose is to produce a relatively clear overflow.

They are basically identical to thickeners in design and layout except that they employ a mechanism of lighter construction and a drive head with a lower torque capability. These differences are permitted in clarification applications because the thickened pulp produced is smaller in volume and appreciably lower in suspended solids concentration, owing in part to the large percentage of relatively fine (smaller than 10 mm) solids.

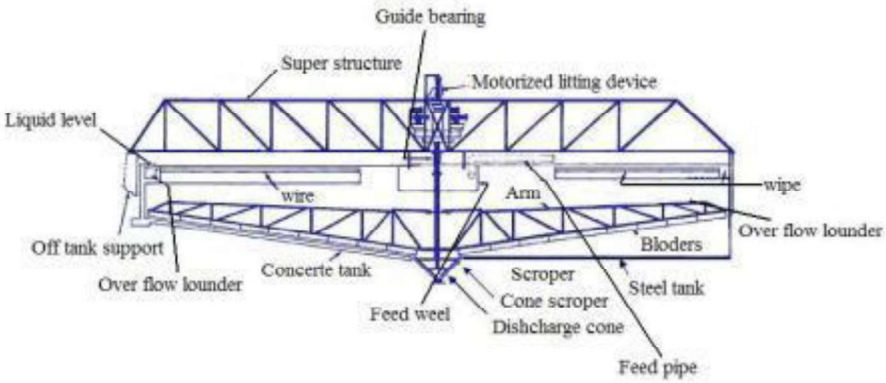


**Fig.8.3 Clarifiers**

### 8.3.2 Rectangular clarifiers

Rectangular clarifiers are employed primarily in municipal water and waste treatment plants, as well as in certain industrial plants, also for waste streams.

### 8.3.3 Circular clarifiers

Circular units are available in the same three basic types as single-compartment thickeners: bridge, center-column, and peripheral-traction. Because of economic considerations, the bridge-supported type is limited generally to tanks less than 20 m in diameter.

### 8.3.4 Tilted-plate clarifiers

Lamella or tilted-plate separators have achieved increased use for clarification. They contain a multiplicity of plates inclined at 45 to 60° from the horizontal. Various feed methods are employed so that the influent passes into each inclined channel at about one-third of the vertical height from the bottom. This results in the solids having to settle only a short distance in each channel before sliding down the base to the collection zone beneath the plates. The clarified liquid passes in the opposite direction beneath the ceiling of each channel to the overflow connection.

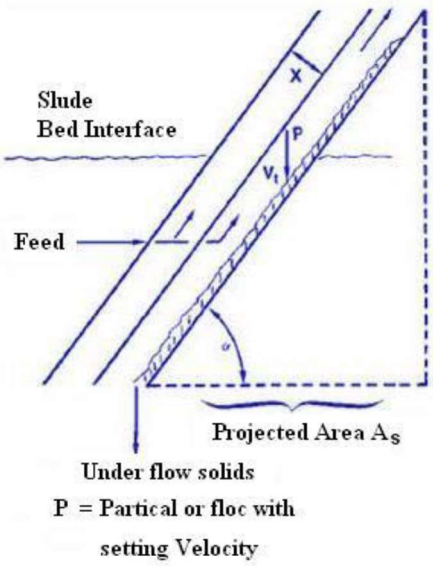


**Fig.8.4 Tilted plate clarifiers**

****** ☺ ******

**Lesson-9**

**Principals Involved in Filtration, Types, Rates of Filtration, Pressure Drop Calculations**

## 9.1 INTRODUCTION

Filtration may be defined as that unit operation in which the insoluble solid component of a solid-liquid suspension is separated from the liquid component by passing the latter through a porous membrane or septum which retains the solid particles on its upstream surface, or within its structure, or both. A broader definition could be that the fluid may be a liquid or a gas; the valuable stream from the filter may be the fluid, or the solids, or both. The solid – liquid suspension is known as the feed slurry or 'prefilt', the liquid component that passes through the membrane is called the filtrate and the membrane itself is referred to as the filter medium. The separated solids are known as the filter cake, once they form a detectable layer covering the upstream surface of the medium. Often the feed is modified in some way by pre-treatment to increase the filtration rate, as by heating, re-crystallizing, or adding a "filter aid" such as cellulose or diatomaceous earth.

Filter, must provide a support for the filter medium, a space for the accumulation of the solids, channels for the introduction of the feed. A means of inducing the flow of filtrate through the filter and medium must also be provided.

## 9.2 CLASSIFICATION ON BASIS OF FORCE

The fluid flows through a filter medium by virtue of a pressure differential across the medium. The flow of filtrate may be brought about by means of gravity alone, by the application of a pressure greater than atmospheric pressure upstream of the medium ( pressure filtration), by applying a vacuum downstream of the medium (vacuum filtration) or by means of centrifugal force (centrifugal filtration).

Filtration under the influence of gravity alone is limited in application to slurries containing very free-draining solids or with very low solids contents. It has a very limited use in the food industry but is applied to the water and sewage treatment.

The applications of filtration in the food industry may be considered to fall into three categories. First category is one in which slurries containing appreciable amounts of insoluble solids are present. In such operations, a cake is formed on the upstream surface of the medium and the process is known as cake filtration. The second category is termed clarification and involves removing small quantities of insoluble solid from a valuable liquid. Here the object usually is to produce a clear liquid and the

solids are generally unwanted. The third category, often referred to as microfiltration, involves the removal of very fine particles, of the order of 1m or less, and is generally directed at removing microorganisms from liquid foods.

In the Dairy Industry, the application of filtration is during:

1. Filtration of raw milk at dump tank, either at milk collection centre or at chilling centres.
2. During processing, while passing through pasteurizer
3. Reconstitution of milk powder
4. Removal of ghee residues from ghee
5. Separation of whey during cheese manufacture
6. Separation of whey during preparation of Channa

**9.3 VERTICAL PLATE PRESSURE FILTERS(FILTER PRESSES)**

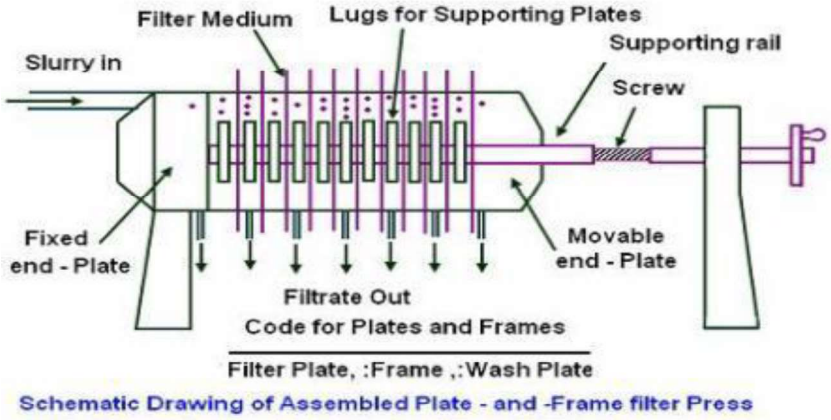


**Fig.9.1 Plate and frame filter**

A vertical drainage plate supporting a filter medium is the basic filtering element in a vertical plate press. A commonly used design is the plate-and-frame press. In this type of filter grooved plates covered on both sides with filter medium alternate with frames in a rack. The assembly of plates and frames can be squeezed tightly together by a screw, hydraulic or pneumatic mechanism to form a liquid-tight unit. The filter medium also acts as a gasket, preventing leakage between the plates and frames. Both plates and frames are provided with openings at one corner and when the press is closed these openings form a channel through which the feed slurry is introduced. In addition, the hollow centre of each frame is connected by an auxiliary channel to this feed channel.

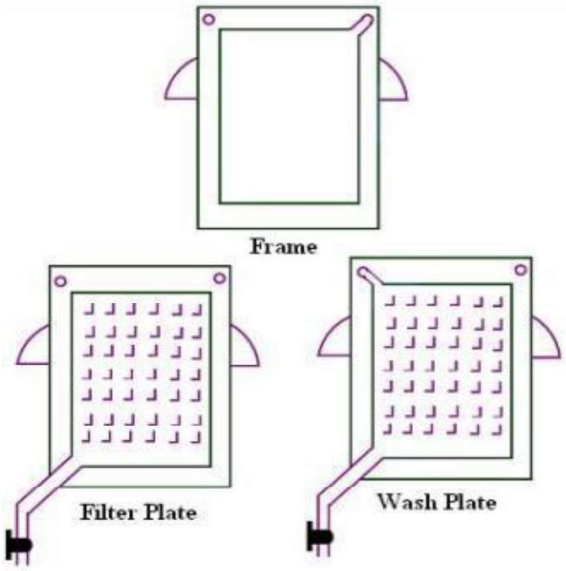


**Fig.9.2 Filter plate and wash plate**

The feed slurry enters the frames and the cake builds up in the hollow centre of the frames. The filtrate passes through the medium and on to the grooved surface of the filter plates from where it is removed via an outlet channel in each plate. Filtration is continued until the flow of filtrate drops below a practical level or the pressure reaches an unacceptably high level, due to the cake packing tightly in the frames. After filtration, washing of the cake may be carried out by replacing the flow of feed slurry with wash liquid. However, more effective washing is obtained by the use of special wash plates. These are arranged in the press so that every second plate is a wash plate. During filtration these wash plates act as filter plates. During washing, the outlets from the wash plates are closed and the wash liquid introduced on to their surfaces through a special inlet channel. The flow path for both filtration and washing when wash plates are used. The cake is removed manually after opening the press.

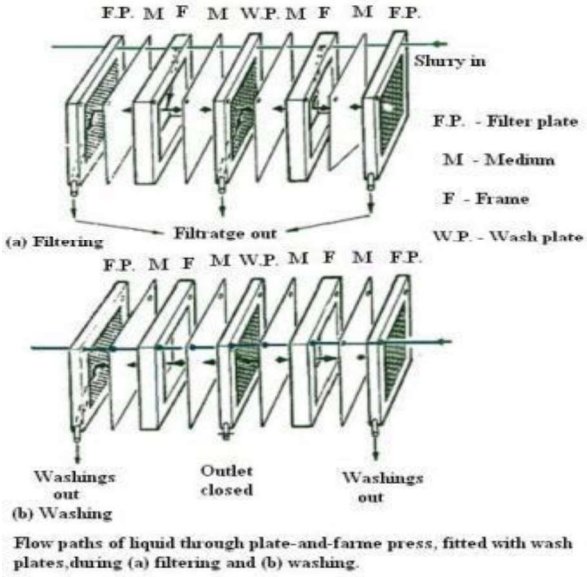


**Fig.9.3 Filtering and washing**

Another common design of filter press is known as the recessed-plates press. In this filter the cake accumulates within recesses in the plates and no frames are used. The feed is usually introduced centrally and removed via an outlet on the corners of each plate. For washing, the feed slurry is replaced by wash liquid entering through the same inlets. Many other types of vertical plate filters are available. Larger presses have facilities for lifting or moving plates and frames mechanically. Presses may be jacketed for temperature control.

The vertical plate filter has found very wide application is industry. It is simple in design and operation, compact, flexible and can be used to handle a wide variety of types of slurry. It is relatively cheap initially. On the other hand labour costs and filter cloth consumption are high and washing of the cake is not always efficient.

**9.4 RATE OF FILTRATION**

The basic filtration equation is

The basic filtration equation is

$$\frac{dV}{d\tau} = \frac{(-\Delta P)A}{\mu\left[\sigma\frac{W}{A} + r\right]} \qquad \text{----------(1)}$$

$$W = w.\ V$$

Where, w= mass of dry cake per unit volume of filtrate, kg/$m^3$ filtrate

$$\frac{dV}{d\tau} = \frac{(-\Delta P)A^2}{\mu[\sigma.W.V + A.r]}$$

$$\frac{(-\Delta P)A^2}{\mu.\sigma.W\left[V + \frac{A.r}{\sigma.W}\right]}$$

Where,

(-$\Delta P$)= Pressure – drop across the filter medium, N/$m^2$ or Pa

V= volume of filtrate collected in time$\tau$, $m^3$

$\tau$= duration of filtration, *s*

A= area of filtering surface, $m^2$

$\mu$= dynamic viscosity of the filtrate, Pa.s or kg/m.s

$\sigma$= average specific cake resistance

W= mass of cake on dry basis, kg

r= resistance of the filter medium per unit area.

(2) Also it can be expressed in other forms. Transposing and integrating equation. We get

$$\mu.\sigma\frac{W}{A}\int_0^v V.dv + r.\mu\int_0^v dV - (-\Delta P).A.\int_0^\tau d\tau$$

Or

$$\mu.\sigma\frac{W}{A}.\frac{V^2}{2} + r.\mu.V - (-\Delta P).A.\tau$$

Or

**Lesson-10**
**Gravity Settling, Sedimentation, Principles of Centrifugal Separation**

## 10.1 INTRODUCTION

Separation of components of immiscible liquids by use of density difference is a well established method. In the dairy industry, the application of centrifugal force is done particularly in separating fat from rest of the milk. It is also being used in separating bacteria from milk.

Different components of milk have the following specific gravities:

Fat: 0.93

Skim milk: 1.036

Whole milk: 1.028 to 1.032 depending on composition

## 10.2 STOKE'S LAW

The rapidity of separation depends on various factors, and can be estimated by use of Stoke's law for gravity separation modified to include the centrifugal force, instead of gravitational force.

Origins of Centrifugal cream separation are from the fundamentals of particle separation by gravitational forces, due to density difference between various components. If the density of the particle is higher than that of the surrounding medium it sinks and if it is lower it rises. The particle remains in suspension if densities are equal.

Considering the particle in the figure 10.1, the particle is acted upon by two forces, viz. gravitational force and viscous force. The gravitational force pulls the particle down, and the viscous force is resisting the movement of the particle. The particle will come down, if its density is greater than the fluid, and it will move up, if its density is less than that of the fluid surrounding it. The expression for these forces is given below.

The Gravitational Force is expressed as:

$$\frac{\pi d^3}{6} \cdot (\rho_s \quad \rho_f) \cdot g \qquad \text{——————} \quad (1)$$

Where d= Diameter of the sphere

$\rho_s$ = Density of solids.

$\rho_f$ = Density of sphere

g = Gravitational component (acc due to gravity)

The viscous force is expressed as:

Co – efficient of resistance

$$\frac{\pi d^2}{4} \cdot \left(\frac{\rho_s}{2}\right) \cdot V^2 \qquad \text{——————} \quad (2)$$

Where V = Velocity of separation of sphere

Since the movement of particle is generally downward, the co-efficient of resistance can be

$$= \frac{24}{R_e} = \frac{24.\mu}{\rho dv} \qquad \text{——————} (3)$$

$$\frac{\pi}{6} d^3 (\rho_s - \rho_f) \cdot g - \frac{\pi d^2}{4} \cdot \frac{\rho_f}{2} \cdot V^2 \cdot \frac{24}{V \cdot d \rho_f}$$

$$\frac{d^2 [\rho_s - \rho_f]}{6 \times \mu} \cdot g = V$$

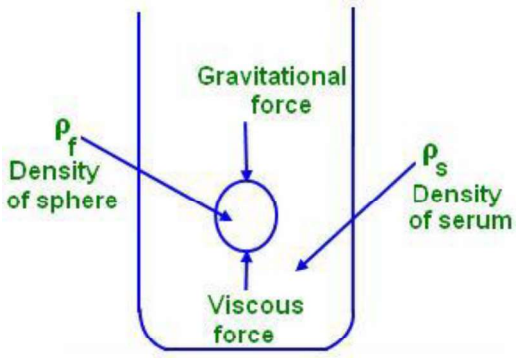


**Fig.10.1 Viscous force**

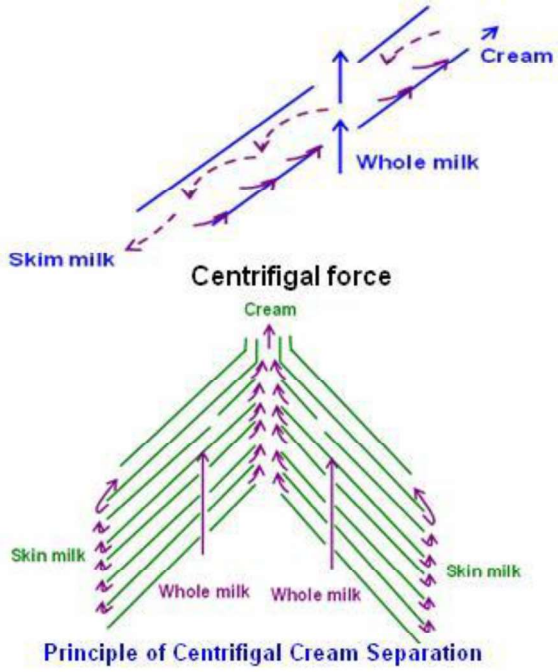


**Fig.10.2 Cream separation**

## 10.3 ENERGY OF ROTATING BODY

Calculation of the approximate power required to rotate the cream separator can be done by assuming that the stack of discs along with bowl as a hollow cylinder with uniform density throughout. The weight of the bowl, W can be given as

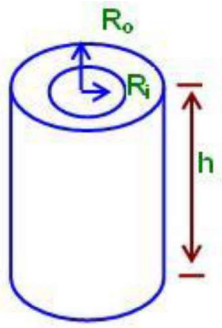


**Fig.10.3 Energy of rotating body**

## 10.4 CAPACITY OF CENTRIFUGAL SEPARATOR

The capacity of the centrifugal separator depends on the number of factors again, viz., the number and size of discs, speed of rotation, the viscosity of the fluid etc. An expression for the throughput of centrifugal cream separator is arrived at as shown below

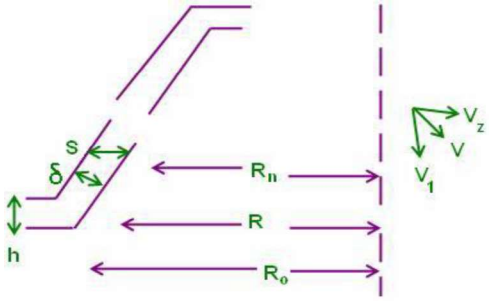


**Fig.10.4 Centrifugal separator**

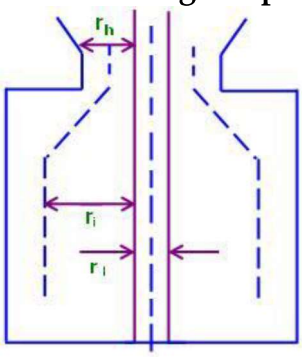


**Fig.10.5 Drag force due to volumetric flow**

'C' is added to take care of deviation due to

1. Velocity profile is not laminor flow
2. Decrease in cross sectional area due to back flow of lighter phase
3. Non- ideal distribution over the feed inlet circumference
4. Geometric in accuracies in the stacks of discs.

The position of neutral zone or the place where the milk enters the gaps between adjacent discs will influence the ease in separation of the denser and lighter phases of the fluid. In applications like Clarifier, where the component to be separated is the denser particles of dust, extraneous matter, the neutral zone should be towards periphery. In the case of cream separation, the component that is to be separated is the fat, which is of lighter phase, the zone has to be towards centre of the disc, to reduce the distance of travel for the separation.

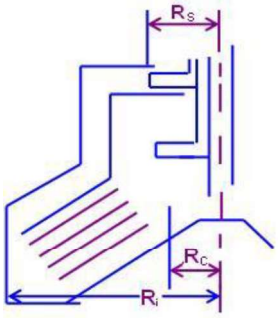


**Fig.10.6 Drag force due to volumetric flow Q ($m^3$/sec**

The pressure exerted by the lighter and heavier fluids, when in equilibrium, on the inner wall of bowl is same

The above is possible, only when the level of the lighter and heaver liquid, are different. (about 3 to 10 mm) by fitting overflow lips of different sizes

The distance $R_S$ of the rotating separated milk ring is greater than $R_C$, the rotating of cream.

****** ☺ ******

**Lesson-11**

**Different Types of Centrifuges: Application in Dairy Industry, Clarifiers, Tri-Processors, Cream Separator**

## 11.1 INTRODUCTION

Mechanical separation by centrifugal force can be classified in broad terms as below, depending on physical state of the components being separated.

1. Liquid from liquid e.g. cream from milk by cream separator

2. Solid from liquid e.g. Ghee residue from ghee by Clarifier

3. Solids from gas e.g. powder from air by Cyclone separator

4. Gas from liquid e.g. vapours from Concentrated milk in Vapour separator

## 11.2 THE DIFFERENT TYPES OF CENTRIFUGES CAN BE CLASSIFIED AS

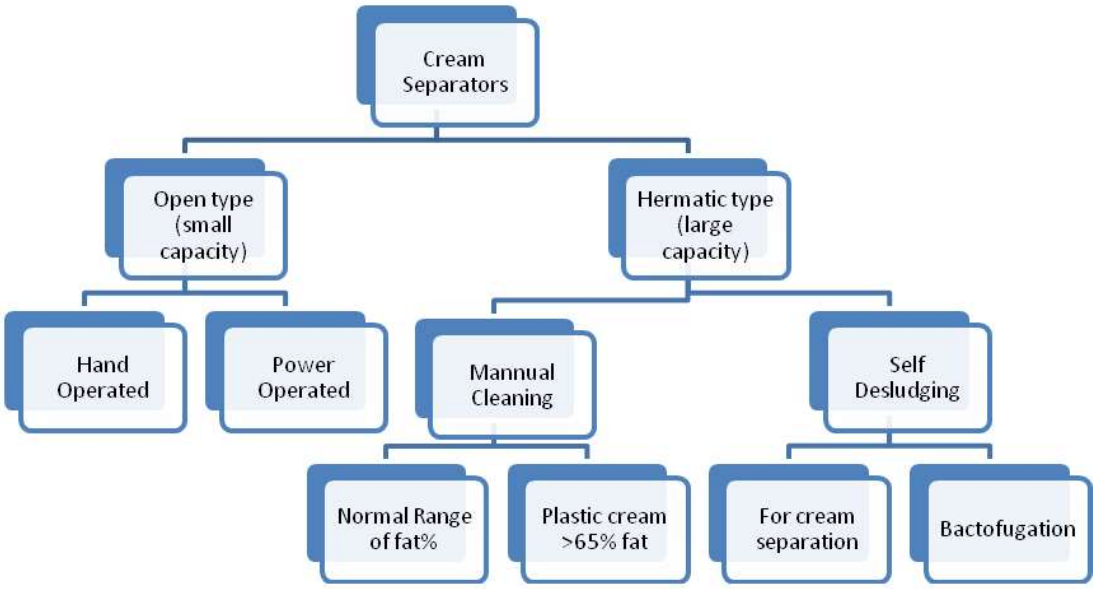


**Fig.11.1 Types of centrifuges**

### 11.2.1 Clarifier

One of the important applications of centrifugal force in dairy industry is the Clarification of milk. It is also based on the density difference between milk and the extraneous matter like dust, hair, leucocytes, and other contaminants. The clarifier is also used in separating Ghee from Ghee residue. The separation process is fast and almost complete. The Clarifier has one entry for the milk or the fluid to be clarified and one exit for the clarified material. The clarifier sludge gets collected in the inner wall of the bowl carrying the discs. The discs are conical in shape and are mounted on a spindle that rotates at high speed and have holes to allow passage of milk to the gaps between the clarifier discs. The location of the holes, called the neutral zone is located nearer to the periphery, such that heavier particles that are to be separated is moved more easily.

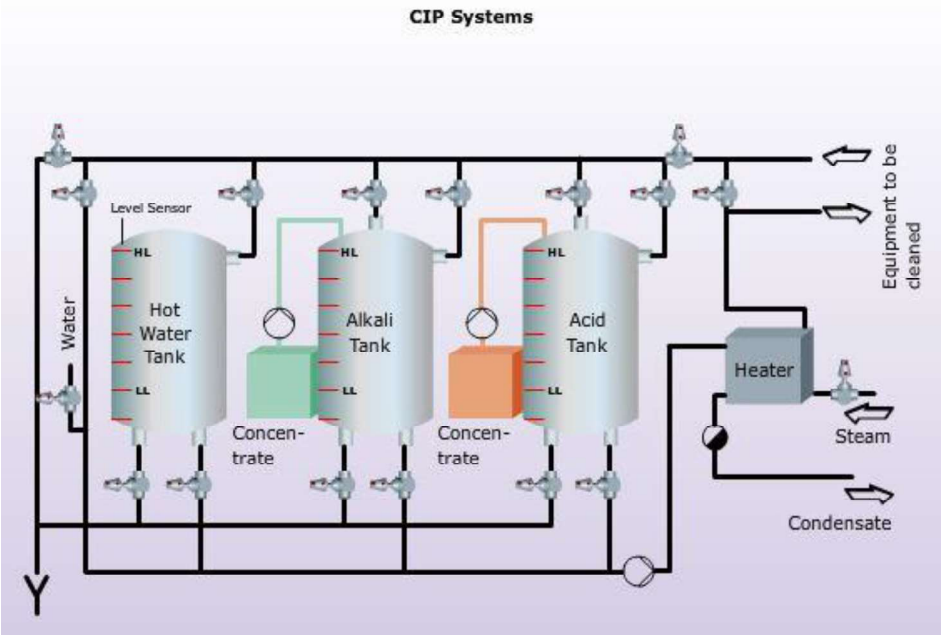


**Milk Clarifying Bowl 11.1**

### 11.2.2 Open type of cream separators

These types of cream separators are fed by milk open to atmospheric pressure, and flow down in separator discs by gravity from a vessel also open to atmosphere. These separators are of smaller capacity, maximum of 1000 lph. They are suitable for sour milk separation and are driven by belt and pulley, powered by small motor. The feed from the vessel flows by gravity through a spout. A float positioned on the top of the inlet prevents entry of air, and allows only milk to enter into the bowl.

The separator disks in the bowl are about 16 to 25 in number, depending on the capacity, and the size . The cream outlet is controlled by a small screw, by which the fat percentage of cream can be varied. As the open type cream separators are not expected to be connected to pasteurizers, and are of small capacity, they are designed to operate with milk not being warmed.

The drive mechanism for the bowl spindle is by a flat belt connected to the driver shaft. The driver shaft is driven by single speed motor. In some smaller capacity designs, the bowl spindle forms the worm and the driver shaft is the worm wheel, which may be driven by hand or by motor connected through a V belt and pulley.

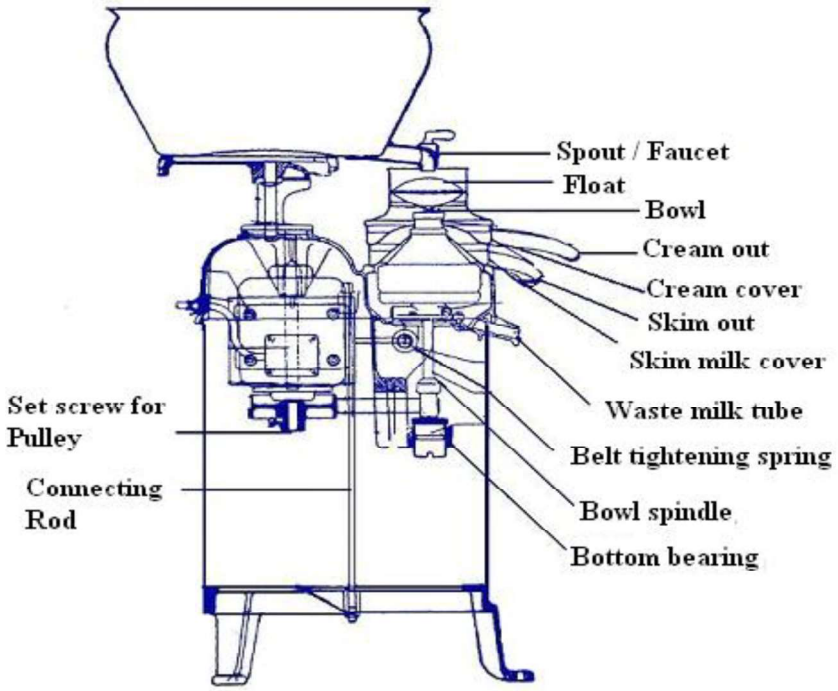


**Fig.11.2 Small capacity cream separator**

### 11.2.3 Hermetic cream separator

The disadvantage of open type cream separator is that it is suited for only small capacities and the discharge is to atmospheric pressure. It cannot be linked to pasteurizer so that the separation can be done at the optimum temperature of 40 to 45°C. The other disadvantage is the product being open to the atmospheric contamination and ingress of air, making the product foamy. The Hermatic cream separator is of larger capacity, and both inlet and outlet are connected to pipes, making it possible to operate under completely air tight condition.

Tri-purpose or Tri-process separators are designed for three purposes, to do separation, standardization and clarification in a single unit. Milk contains dust, leukocyte cells etc, which are removed before processing. This function of Triprocess separator is called "Clarification". Depending upon the requirement, the fat may be removed partially to a fixed percentage known as standardization or completely skimmed termed as cream separation. The control of cream outflow can lead to these variations in operations.

#### 11.2.3.1 Description

1. The separator has horizontal and vertical drive systems for the separator bowl.

2. The horizontal drive system consists of an electric motor, centrifugal clutch and drive shaft with worm wheel.

3. The vertical drive system consists of a shaft , called the bowl spindle on the top of which the separator bowl is mounted. The shaft has teeth to match worm wheel.

4. Power from the motor is transmitted from the worm wheel on the horizontal drive shaft to a worm gear of the bowl spindle.So the bowl spindle rotates at higher speed (say 4 to 5 times higher) than the horizontal drive shaft speed.

5. Precision ball bearings support the drive components and thus eliminate vibration.

6. Also mounted on frame is a hand brake acting on the clutch disc, a tachometer and revolution counter button for speed indication, an oil filter plug and a drain plug, an oil level glass, etc.

7. The bowl consists of two main sections: the body and the hood, which are held together by a threaded lock ring.

8. The disc stack is clamped between the hood and the bell shaped distributor at the axis of the bowl.

9. The gap between discs is about 0.5 mm. The disc wall thickness is about 0.4 mm and angle of inclination to the horizontal is 45 to 60 degrees.

10. The bowl speed is usually 5500 to 6000 rpm.

11. The bearings in the frame are splash lubricated by the worm wheel, which runs partially, immersed in an oil bath in the base of the frame.

12. Separators separate about 98.5 to 99% of fat in milk (0.02 to 0.05% fat in skim milk).

13. Cream outflow from the separator normally represents about 10% of the total milk feed.

14. The feed to the separator is by a pump, in case the supply tank is far away. Otherwise, a centripetal pump with impeller leads the milk suction line into the spindle, from where the milk enters the bottom of the distributor.

15. For the requirement of standardization, the outlet of cream is kept at a higher discharge pressure to that of skim milk outlet. The flow rate of cream is measured by a rotometer.

The internal parts of the bowl and the drive mechanism is shown in figures 11.2 & 11. 3.

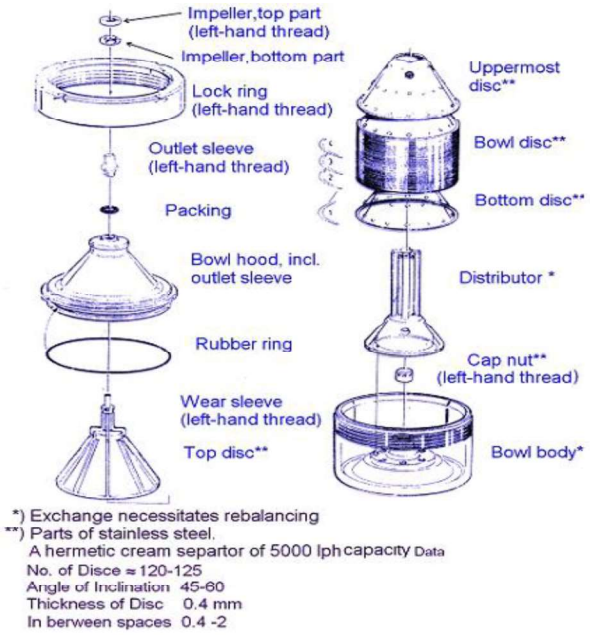


**Fig.11.3 Hermetic cream separator (Adapted from Operators manual of Alfalaval Pvt Ltd)**

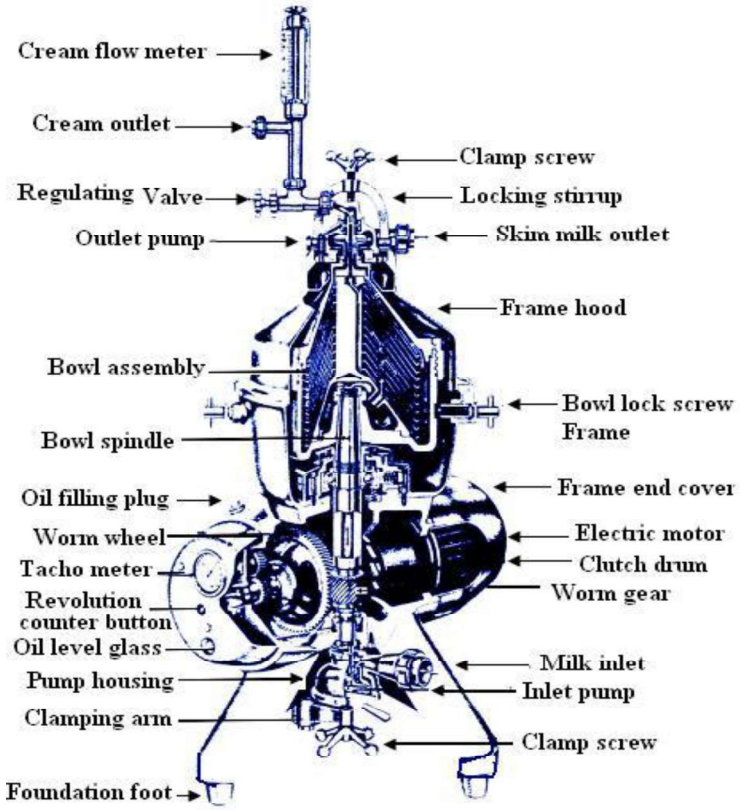


**Fig.11.4 Cream separator (Adapted from Operators manual of Alfalaval Pvt Ltd.)**

**Design of a wormgear set with a steel worm and a bronze gear**

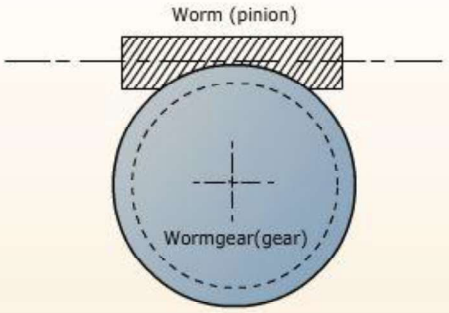


| | |
|---|---|
| C = | Center-to-center distance |
| N1 = | Worm teeth number |
| N2 = | Gear teeth number |
| $\varphi_n$ = | Worm normal press angle |
| n1 = | Pinion speed |
| Cast method | 1=sand, 2=chill, 3=centrifugal |

## Hermetic Cream Separator 11.2

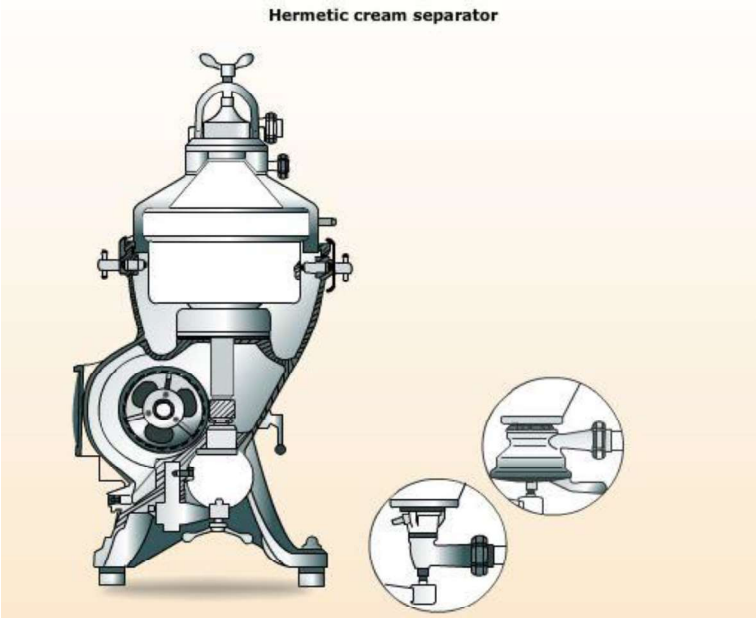


## Worm and Worm wheel 11.3

****** ☺ ******

**Lesson-12**

**Self- desludging Centrifuge, Bacto-fuge, Care and Maintenance of Separators and Clarifiers**

## 12.1 INTRODUCTION

Cream separator and also clarifier, have to be stopped, and dismantled for cleaning often, especially when the quality of the milk is bad. This involves interruption of HTST pasteurization operation also. Hence, a method of ejecting the sediment that is separated during clarification or cream separation was developed. This involved certain changes in the design, especially the lower part of the bowl which encloses the separator discs.

## 12.2 SELF DESLUDGING OPERATION

The milk sludge, produce during the separation in a separator collects in the sludge space of the bowl, which is designed as double taper. The bottom disk of the sludge space can be controlled hydraulically to be moved downwards, so that the sludge can leave the bowl through the double conical portion, where holes get uncovered. The sludge ejected from the bowl is collected in the upper transmission part consisting of stainless steel, and is fed through the sludge collector to the sterilizing vessel. The sludge collected in vessel is sterilized by adding caustic soda, under high temperature. After the sterilizing process has been terminated, the vessel must be emptied in order to make provision for having space for fresh sludge ejections. The hydraulically controlled bowl opening mechanism can be operated both manually and automatically.

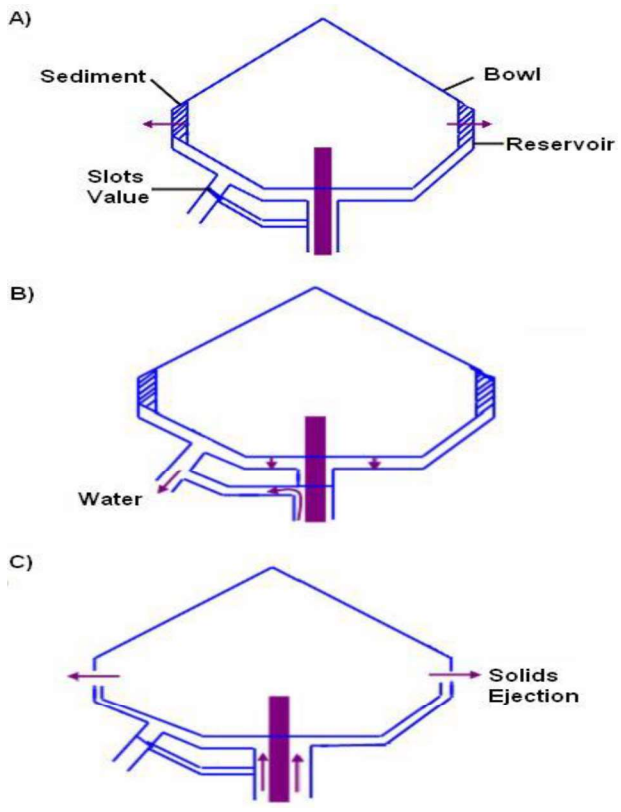


**Fig.12.1 Self desludging operation**

### 12.2.1 Control system diagram

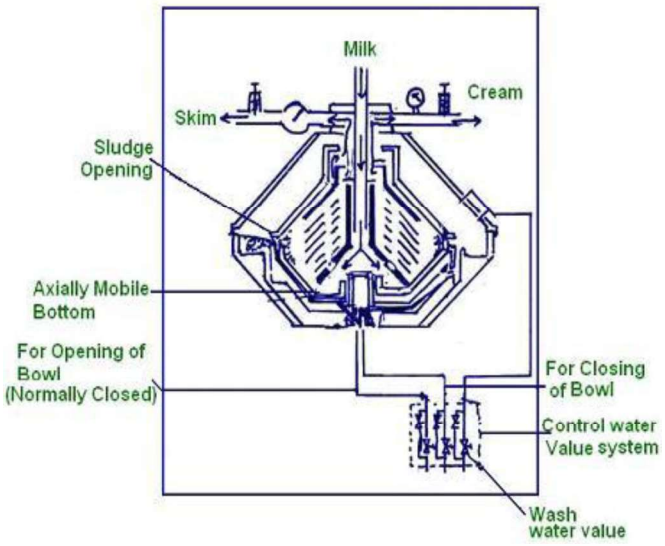


**Fig.12.2 Control system**

### 12.2.2 Operation of control system

The removal of the sludge from the bowl is through the openings arranged at the widest circumference of the sludge space, and closed by an axially mobile bottom during the separation process. The opening and closing movements of the mobile bottom valve are controlled by a hydraulic control system. The control system associated with the bowl consists of the mobile bottom valve hydraulically movable in the bowl; the control water feed , the control water valve system with the solenoid and manually controlled valves for automatic and manual control, and the program control system. The bowl control system is operated in normal operation by a preselected desludging program. Any required full desludge operation can be controlled semi- automatically by the valve control cabinet. In the case of current failure or other possible defects, putting the control cabinet or the electrical control valves out of operation, the separation process can be brought to an end by operating the manually-operated valves.

The water used for hydraulic operation must be clean, soft fresh water. The control water pressure also must be sufficient, usually about 2.5 $kgcm^2$

### 12.3 BACTOFUGATION:

Bactofugation is the process of separation of microorganisms from milk by using centrifugal force.

### 12.3.1. Advantages

- It is useful when UHT process is being done for the milk
- In the production of low heat powder, both aerobic and anaerobic spore formers can be considerably reduced. The low heat powder is useful in preparation of recombined milk.
- Cheese making for special cheeses using unpasteurized milk e.g Mozarella, Camemberti
- Most of the spores can be removed, and only that component which is around 2.5 to 3.0% of milk will be given the UHT treatment, thereby saving energy and nutritional quality.
- Because only part of the milk is heated, it is economical.

### 12.3.2 Densities of components

As the separation by centrifugal force depends on density differences, its is useful to know the densities of various components.

**Table 12.1 Densities of various milk components**

| | Density(gm/cc) |
|---|---|
| Milk | 1.028 to 1.032 |
| Skim milk | 1.036 |
| Fat | 0.93 |
| Bacteria | 1.07 to 1.13 |

As we observe the above values, the bacteria is denser than most of the components, and hence, it can be separated by regular centrifugal process. Care must be taken to safely dispose of the sludge that is separated. A self-desludging type of separator is most suitable.

### 12.3.3 Effect of bactofugation

By Bactofugation at 50 to 55 °C about 89 to 93% of the bacteria is removed. It be still more effective, if the milk is first clarified and then Bactofugation is performed, eliminating bacteria upto 99%.

**Table 12.2 Percentage of components removed by clarifier and bactofugation**

| | Clarifier slime | Bactofugal slime |
|---|---|---|
| T.S | 18.2 % | 16.0 % |
| Fat | 0.03% | 0% |
| Protein | 12.8 % | 11.3% |

### 12.4 BACTOTHERM

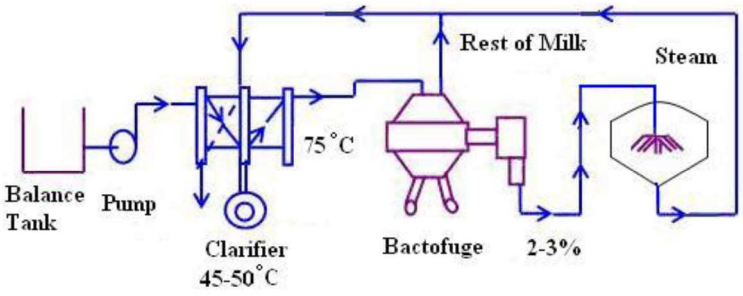


**Fig.12.3 Bactotherm Process**

## 12.5 MAINTENANCE OF SEPARATORS AND CLARIFIERS

Centrifugal separators are high speed equipment, with clarifier bowl having discs held vertically by support of bearings. The passage of the fluids like milk, cream, skim milk are separated

### 12.5.1 General observations in maintenance

1. Rubber gaskets, 'O' rings must be replaced before they wear out
2. Lubrication oil in the oil sump must be of required quality and should be upto appropriate level.
3. Bearings holding the spindle must be replaced regularly, to prevent bending of the shaft itself, in addition to rapid wear out of 'o' rings, drop in efficiency of separation and capacity.
4. Discs should be cleaned with softer material and not with wire mesh, and should be placed on rubber mat during cleaning.
5. The discs should be stored properly without damage.
6. Assembling of discs and other components must be properly done, without causing any vibrations, damage to parts and decrease in capacity.
7. Cream separator should not be run dry without any fluid.
8. No adjustments, assembling, disassemble to be done while the cream separator is revolving.
9. Worn out worm or worm wheel to be replaced before damage to other parts due to jerks, and loss of speed of rotation of bowl.
10. Centrifugal clutch shoe should be replaced to prevent any loss of power transmitted to worm wheel. They have to be roughened from time to time to give grip.
11. Bearings to the shaft of worm wheel should be replaced when worn out.
12. Under no circumstances, the direction of rotation of spindle be changed. This is likely to happen, when motor for the drive is repaired and reconnected with the three phase line, without checking for the direction of rotation.
13. Milk being fed to the separator must match the desired feed pressure recommended.
14. While assembling and disassembling, the nature of the threads whether right hand threads or left hand threads should be taken note of and accordingly done.
15. Under no circumstances, the weight of the connecting pipe lines should strain the separator.
16. Some of the cream separators like self desludging type, the lubricating oil is further cooled by cooling water. It is important that the cooling water should be of sufficient flow and pressure required, as well as soft water type. Under no circumstances, the cooling water by pass valve from the control water line should be closed or disturbed once the flow requirement is set.
17. The cream separation should not be done at too high temperatures than recommended, as the life of the rubber collars, packing etc will be reduced.

****** ☺ ******

**Lesson-13**

**Solving Numerical**

**13.1** Problem on Gravitational separation

Calculate the rate of rise of fat globule of diameter 3 microns at 20 °C with a density of solids – not – fat as 1030 kg/$m^3$ and that of fat globule as 930 kg/$m^3$ and the viscosity of liquid as 1.79 x $10^{-3}$ Pa. S

Soln: $V = d^2 . ( r_s - r_f) . g / ( 18 . micron)$

$= 3 \times 3 \times 10^{-12} \times (1030 - 930) \times 9.81 / (18 \times 0.00179)$

= 2.74022E-07 m/sec

= 0.00986 m/h

**13.2** Problem on Centrifugal separation

For the above problem 13.1 if radius of bowl , R = 0.14 m and RPM is 5500 rpm, determine the fat separation velocity.

Ans: Velocity of separation of fat, V = 0.0933 m/sec or 335.909 m/h

**13.3** Determine the Capacity of Hermetic Cream Separator if:

| | | |
|---|---|---|
| No. of discs | 105 | |
| Disc Angle | 55 | o |
| Outer Radius, Ro | 0.13 | m |
| Inner Radius, Rn | 0.075 | m |
| limiting diameter of fat globule,d | 1.6 | micron |
| Number of revolutions, n | 6000 | 100 rps |
| Density difference of milk and fat globule, $\Delta\rho$ | 116 | kg/m3 |
| Correction factor, C | 0.6 | |
| Absolute Viscosity, $\eta$ | $1.04 \times 10^{-3}$ | 0.00104 Pa.s |

**Solution:**

$Q = C(2\pi)^3 z \tan\alpha (Ro^3 - Rn^3) n \times d^2 10^{-12} \Delta\rho / 18 \mu$

**Q = 7530 l/h**

****** ☺ ******