Wind-tunnel techniques – 3

Wind Tunnel Measurement

By

Sangram Samal

Pressure Measurement

Pressure measurement in experimental aerodynamics is important. From the pressure distribution on a body we can determine the forces acting on it also we can determine the local velocity.

Measurement of static pressure

A common technique is to connect a stationary probe to an orifice drilled perpendicularly to the wall of the test model at a point where the streamlines are undisturbed and parallel to the streamlines in the undisturbed flow. Neglecting minor disturbances caused by the orifice the pressure sensed by the manometer is equal to the static pressure in the flow.

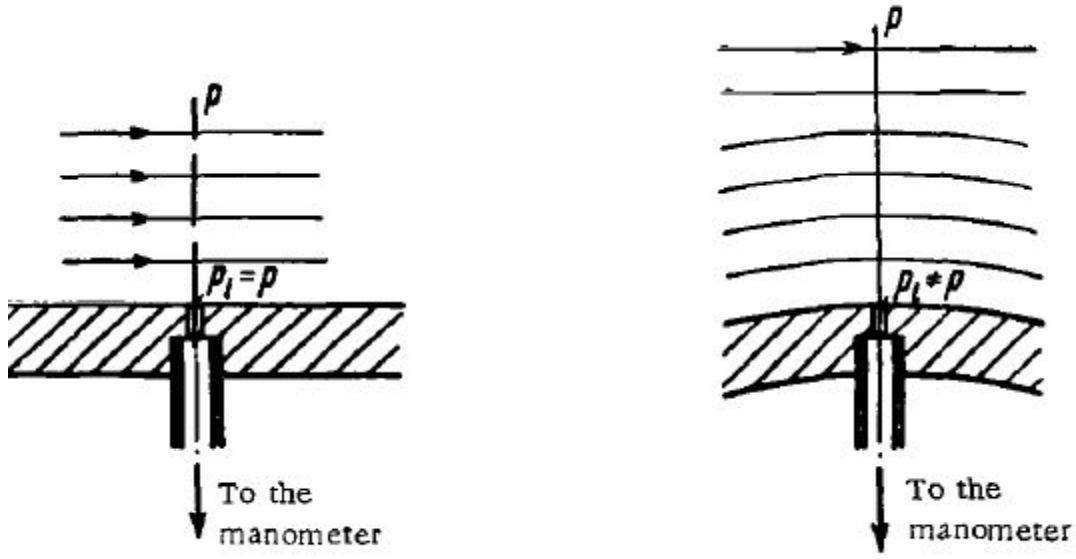

Measurement of static pressure. a — at a flat wall; b — at a curved wall.

Measurement of total pressure

- At stagnation point velocity is zero. The heat transfer is negligible in subsonic flow
- The total pressure at the stagnation point is almost exactly equal to the initial stagnation pressure in the settling chamber of the tunnel.
- Total pressure is measured with a cylindrical tube having an orifice pointing toward the flow. The shape of the nose and the ratio of the orifice diameter to the external diameter of the tube do not influence the total-pres sure measurements over a wide range of velocities, provided that the axis of the tube coincides with the flow direction.

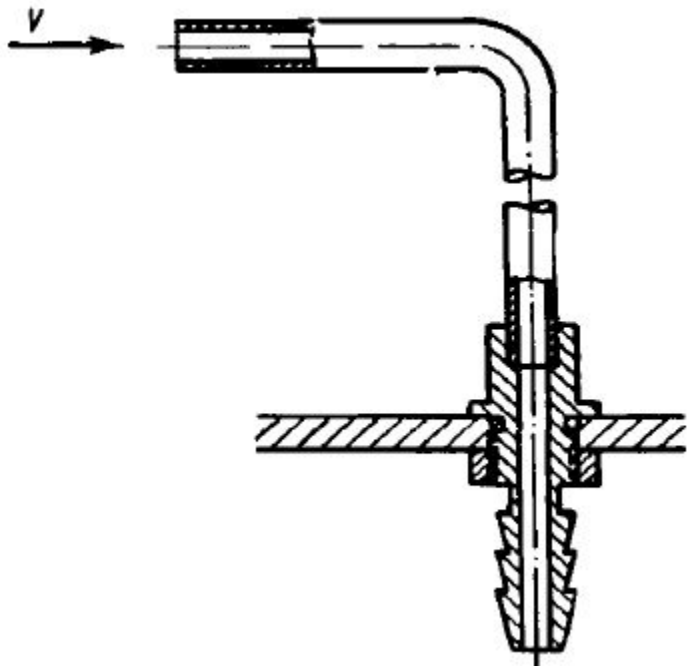

Total- pressure tube.

Pressure measuring Device

- The instruments used for measuring pressures in aerodynamic research can be divided into the following groups:
  1) liquid-column manometers,
  2) pressure gages with elastic sensing elements (mechanical),
  3) pressure transducers,

<u>Liquid-column manometers</u>

- Basic principle of manometer is the pressure applied is balance the weight of a liquid column
- The medium used in liquid-column manometers is most often alcohol, water, **or mercury;**
- The main requirements for manometric fluids are: high chemical stability, low viscosity, low capillary constant, low coefficient of thermal expansion

- **<u>U-tube manometers</u>**
- The U-tube manometer consists of two communicating vertical glass tube. The pressure difference to be measured is related to the level difference *h in the tubes (legs) of the manometer by the equation*

$$P1 - P2 = \rho g h$$

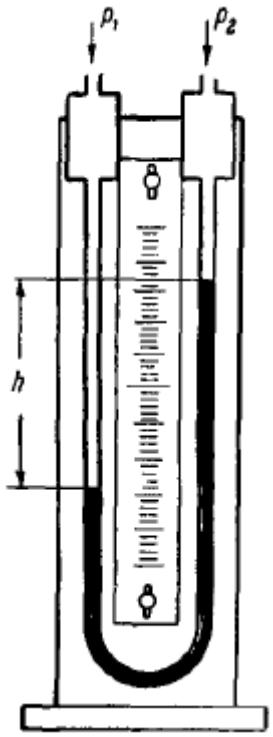

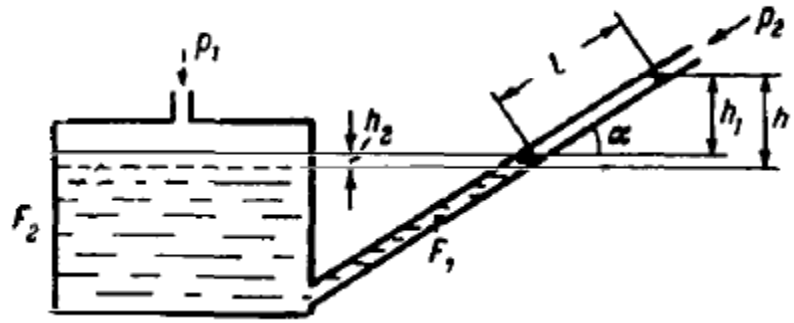

Inclined micromanometer.

MULTIPLE MANOMETERS

- The most widely used instrument for measuring pressure distributions is a liquid-column multiple manometer. This is used to measure large number of pressure at a same time
- U-tube manometers are used only when the measured pressure differences may have different signs.

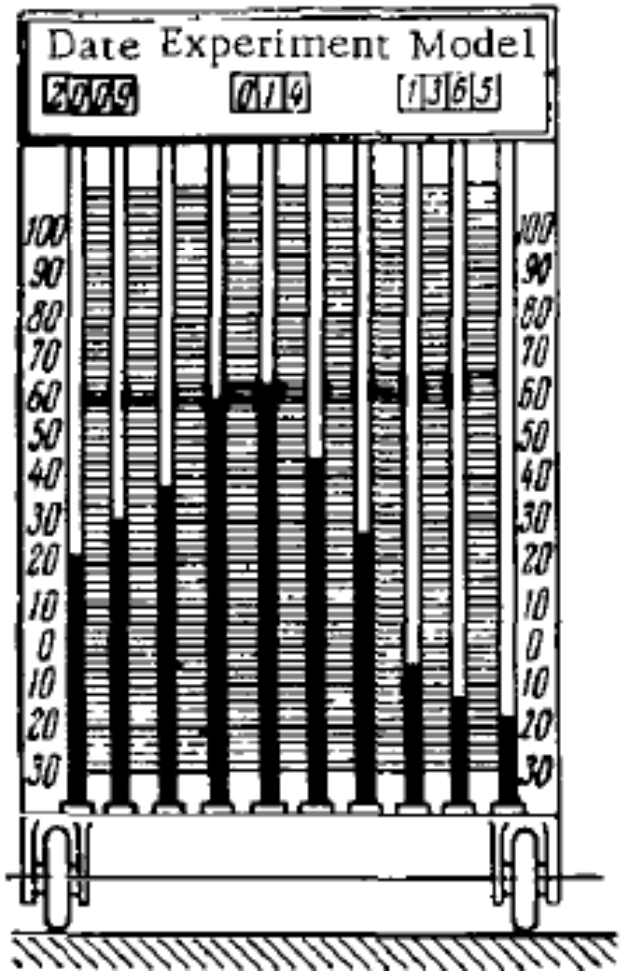

MECHANICAL MANOMETERS

- When large pressure of the order of MEGA Pascal have to measure the liquid column required extremely large and measure in liquid manometer became unmanageable.
- For such high pressure measurement dial type of pressure gauge is appropriate. Due to change in pressure the mechanical device will expand or compress. This motion can be read on the dial type or on screen.
- Bellows are most widely used in the design of manometers employed for measuring steady pressures in wind tunnels. A bellows is a cylindrical thin-walled tube with uniform folds. The presence of a large number of folds makes possible large deformations of the moving bottom of the bellows under the action of pressure differences.

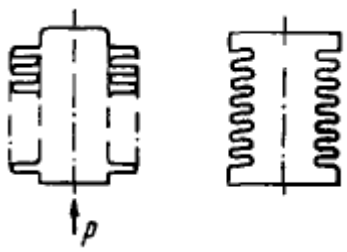

bellows.

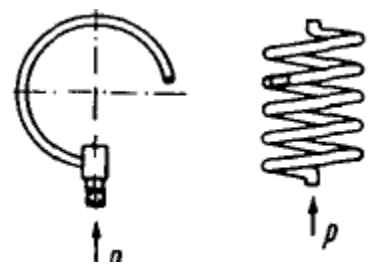

ELECTRICAL PRESSURE TRANSDUCERS

- Pressure transducers can be designed and built for almost any pressure generally encountered in luid flow measurement and they can also be used for remote indication
- Pressure transducers are instruments which convert pressure into an electric signal.
- Theses transducer is classified as mechanical, electrical and optical type.
- Commonly used transducer employ an elastic diaphragm which is subjected to a displacement whenever pressure is applied. This movement is small and kept within the linear range and amplified using a mechanical, electrical, electronic or optical system

Static Probe

- Static pressure measurements are very sensitive to the inclination of the tube to the flow direction
- It is common practice the probe should have four holes in mutually perpendicular directions
- The static probe hole should be located such a location that the effect of flow separation and boundary layer should be very less

- For correct measurement of static pressure, the pressure tap must be located in the zone where the pressure acting at probe surface should be equal to the free stream static pres sure. Hence appropriate location of static hole will depend on the probe nose. The appropriate location found by experimental research is about 8D from the probe nose for Conical or ogival tubes

Sub sonic static probe:

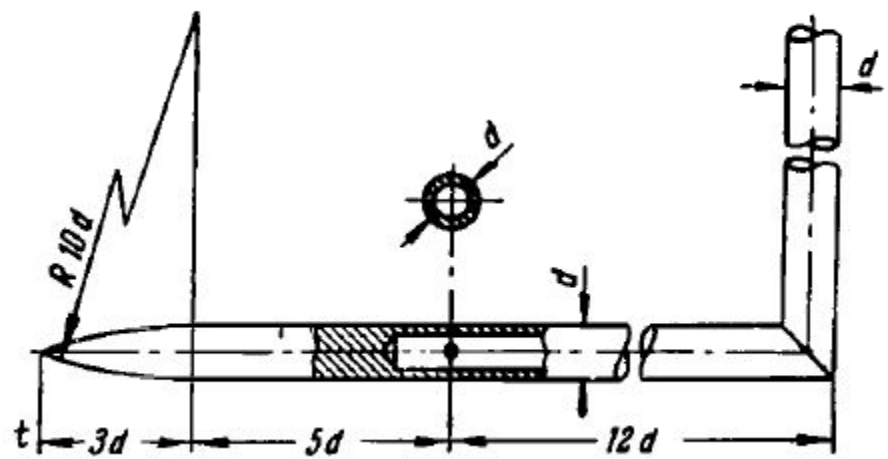

- For measurement of static pressure in supersonic flow, the static pressure hole should be located beyond 18D from the nose . It should have very sharp nose (angle less than 10 deg) to avoied of velocity changes near to the hole
- Special care should be taken when drilling these holes since at supersonic velocities the smallest roughness at the edges may cause large errors in the pressure measurement.
- Also it is usal practice to use straight probe (without vertical stem) in supersonic flow

Pitot Tube

- Pitot tube is used to measure the total pressure of fluid
- This will have hole perpendicular to flow direction

Pitot-static tube

- For correct measurement of static pressure, the pressure tap must be located in the zone where the pressure acting at probe surface should be equal to the free stream static pres sure. Hence appropriate location of static hole will depend on the probe nose

NPL tubes

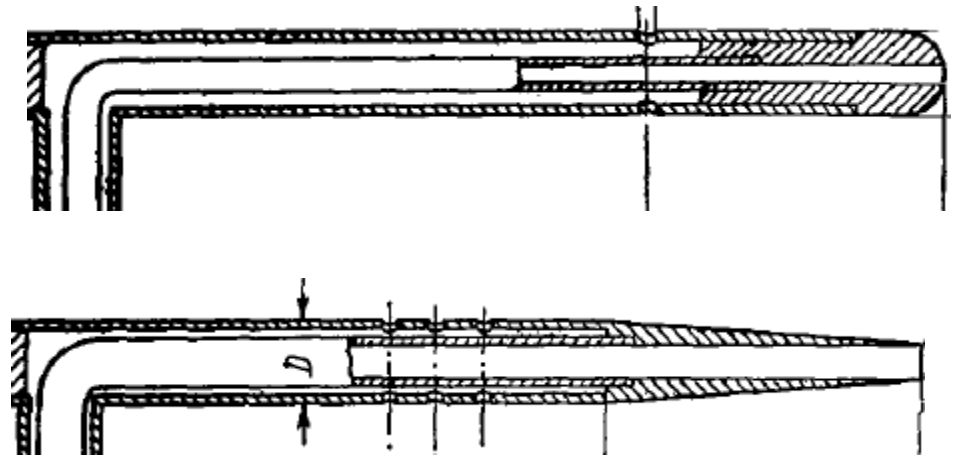

Pitot-Prandtl tube

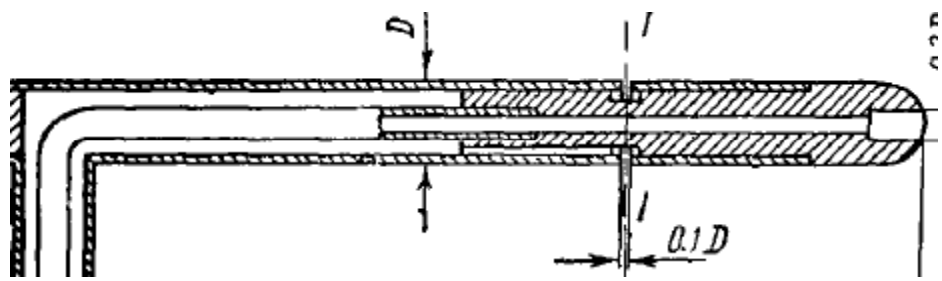

NPL – National Physical Laboratory

- The NPL tube has circular orifices to sense the static pressure, while the Pitot-Prandtl tube has slots.
- Slots are less liable to clogging, but the measured static pressure is more sensitive to the geometry of the slot. Circular orifices are there fore generally used in hemispherical-nose tubes
- NPL pitot-static tube is treated as standard for many years.

- The pitot-static tube measure both pitot and static pressure in a fluid flow
- **<u>Limitation of Pitot-Static Tube</u>**
- It is very difficult to measurement of small differential pressure experience at very low speed.
- **<u>Factor influencing Pitot-Static tube Performance</u>**
- Major factor influence the pitot-static tube are
  - Turbulence
  - Velocity Gradient
  - Viscosity
  - Vibration effect (within vortex shedding)
  - Misalignment

The measurement of the Mach number and flow velocity

- Velocty can be measured directly or indirectly as follows:
- The velocity of flow can be directly measure by the photograph technique. Small light particle (aluminum foil) can be kept in water surface and the photograph can be taken at different time interval. Distance can be measured and velocity can be calculated (distance / time)
- Usually the velocity measured in wind tunnel is always indirect method. Velocity or mach no can be calculated from other parameter which are more easily measured in wind tunnel. The parameters P_o, T_o, P and T can easily be measured directly inside the wind tunnel. To find out these parameter, pressure transducer or pitot-static or hot-wire anemometer are used
- In isentropic flow (super sonic) the Mach number can be found using the relation

$$\frac{T_0}{T} = 1 + \frac{\varkappa - 1}{2} M^2.$$

$$\frac{p}{p_0} = \left(\frac{\rho}{\rho_0}\right)^{\varkappa} = \left(\frac{T}{T_0}\right)^{\frac{\varkappa}{\varkappa - 1}},$$

$$\frac{\rho_0}{\rho} = \left(1 + \frac{\varkappa - 1}{2} M^2\right)^{\frac{1}{\varkappa - 1}}.$$

- ***Pl look (calibration of supersonic w/t) section for other method to find out the mach no in super sonic flow***

- For subsonic(incompressible) flow following relation can be used after finding out Δp
-

$$V = \sqrt{\frac{2(p_0 - p)}{\rho}} = \sqrt{\frac{2\Delta p}{\rho}};$$

THE MEASUREMENT OF FLOW DIRECTION

The stream line of the flow inside the test section should be parallel to the tunnel axis, when the tunnel is run without any model in the test section. The measurement of angularity inside the test section can be done using Yaw sphere or Claw yaw meter.

Yaw sphere

- for measuring the angularity of 2-D flow we need two-hole yaw sphere, however a yaw meter with four holes is required for 3-D flow because the yaw and pitch of the stream need to be measure at same time.
- A sphere with the two orifices located 90 deg apart on the forward port
- The yaw sphere (instrument) axis has to be adjusted in the vertical plan until both the pressure taps measure equal pressure by two pressure tap. Now the angle between the tunnel axis and yaw speher axis gives the angle between the flow axis and tunnel axis.
- **Claw yaw mwter**
- Claw yaw meter work same principle as yaw sphere

Spherical yawmeter

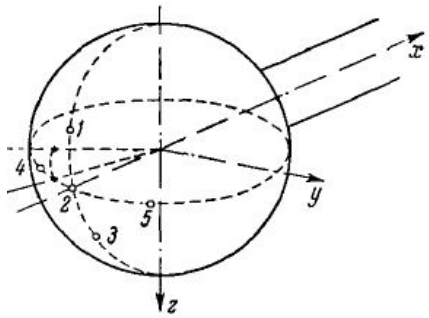

Hemispherical yawmeters

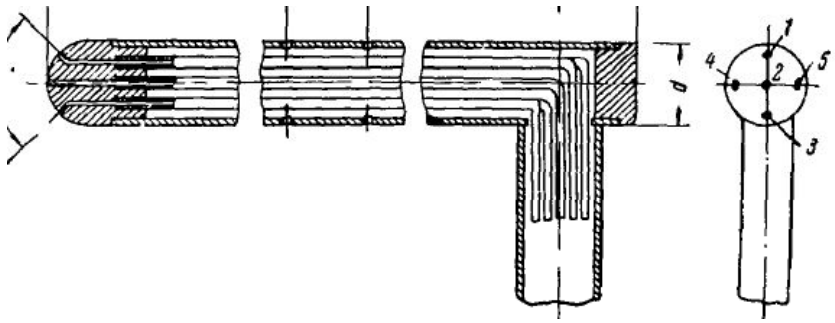

Claw yaw meter

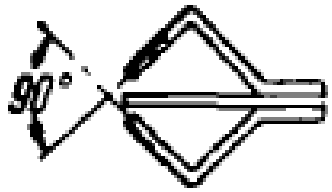

MEASUREMENT OF TEMPERATURE IN FLOW

The measurement of the temperature of a flowing gas is important in investigations of the aerodynamic heating of the surfaces of aircraft and rockets. Temperature can be find out measuring following changes in a thermometers

1. The expansion or contraction
2. Increase or decrease in pressure if it is enclosed
3. Change in color
4. Change of state
5. Change of electrical resistance
6. Generation of electromotive force
7. Change of degree of surface radiation

Following are different types of thermometers are used to measure the temperature

Following are different types of thermometers are used to measure the temperature

1. Mercury in glass Thermometer
2. Backmann Thermometer
3. Gas Thermometer
4. Bimetallic Thermometer
5. Thermocouple Thermometer

Force Measurement

The aerodynamic forces and moments acting on models tested in wind tunnels can be determined indirectly by measuring the pressures at many points of the model surface. Using wind-tunnel balances directly the forces and moments can be measure for a model.

A wind tunnel balance is device to measure the actual forces and moments acting on a model placed in a test section. Wind tunnel balance should have following characteristics for better measurement.

1. Balance should be capable of measuring the various component (1 to 6 component)
2. The forces and moment can be measure at deferent angle of attack using the balance
3. The support system of balance should be highly rigidity
4. Use of bearing should be avoided as they cause large error

Based on the construction details, the wind tunnel balances are broadly classified as

1. Wire-type Balance
2. Strut-type Balance
    1. Platform-type Balance
    2. Yoke-type Balance
    3. Pyramid-type balance
3. Strain gauge-type Balance
    1. Internal Balance
    2. Semi-internal Balance
    3. External Balance

Wire-type Balance

In wire type balance the model is supported by the wire only. The forces are transmitted to the measuring device by the wire. This type of balance is simplest to build. Following are disadvantages due to use of bearing and crank systems and friction of the wire.

- Large tare drag because of the exposed wire. Difficult to measure this drag accurately
- Error is occurred due to bearing and the linkage
- Wire is tendency to break
- Wire will take only tension (no compression)

<u>The usual arrangement of wire type of balance as follows:</u>

- Model are tested in inverted position
- The wire will take only tension, so it is essential to arrange the wires such that, for all type forces (lift and drag), the wire should be in tension
- Conventional three-points attachment is provided on the model pulleys, ball bearings and leaver arm to transfer the loads to the measuring device.
- The principle of measuring forces (lift and drag), used when the model is flexibly supported, is illustrated in Figure

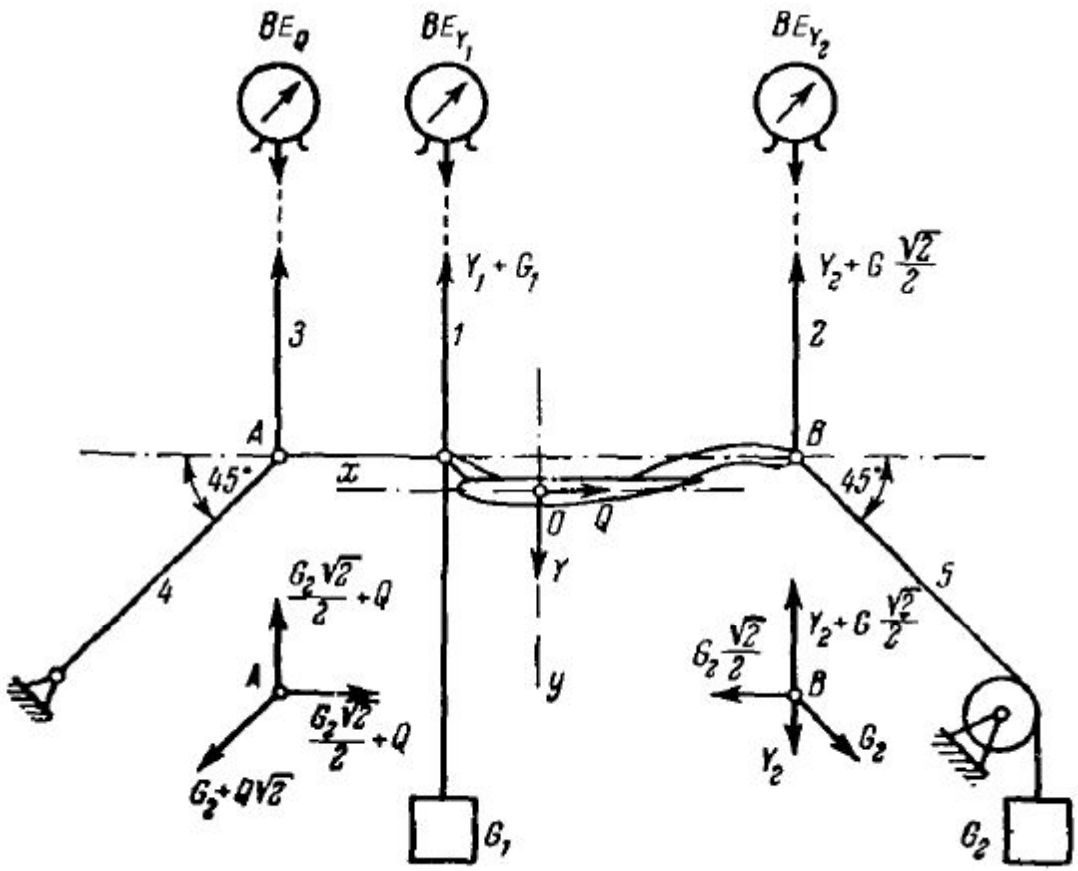

- The vertical force *Y is directly* taken up by wires (1) and (2), pre-tensioned by counterweights GI and G2.
- The change in tension in wire (3), which is measured by balance element *BEQ, is equal to the drag Q of the model.*

Strut-type Balance

- Wire type balances are used very less in large tunnel. The strut types are proved to be suitable device to measure the forces in wind tunnel. Based on the construction, strut-type balances are classified as:
  1. Platform-type Balance
  2. Yoke-type Balance
  3. Pyramid-type Balance
- Strut are used to support the model and transmit the forces to measuring device. Conventionally the model is moistened by three point mounting (two on wing and one on rear fuselage of aircraft model). The advantages of strut-type balance are:
  1. The strut is very rigid and their deflection (error) is very small
  2. The drag(tare and interference) of the strut is very small
  3. By selecting the linkage system the interaction load can be reduce to a small value
  4. Weight of support system can be kept very small

Platform-type Balance

- There is only one mounting point on fuselage, by which the model is mounted
- The model is supported on the platform by a single streamlined strut
- The interference is minimum due to single mounting system from model
- The model is supported with the platform with this single supported
- The platform is supported three point as shown in fig
- The load is calculated as

Yoke-type balance

- The model is supported on balance single streamlined strut like platform type balance
- The model is mounted on a yoke as shown in fig

Pyramid-type Balance

- In pyramid-type balance. The model mounting is about one point connecting the model to platform by four arms
- pyramid-type balance, compared to the platform or yoke type, has specific advantage.
- In this the forces and moments acting on the model are measured with respect to single point (attached point)
- The error in this balance is less compare to other two type of balance

Other type of strut balances

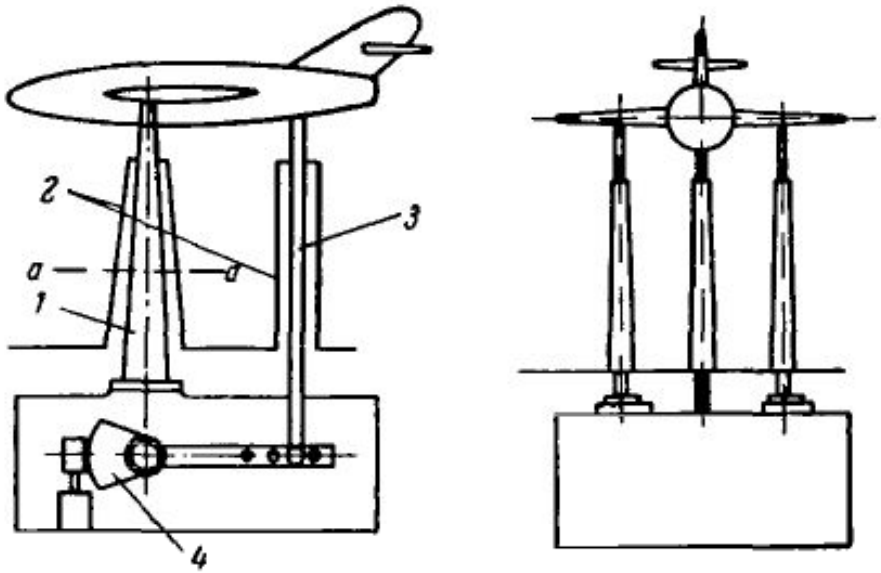

Three-strut support devices. 1 — leading strut; 2 — shrouds; 3 — trailing strut; 4 — mechanism for altering angle of attack.

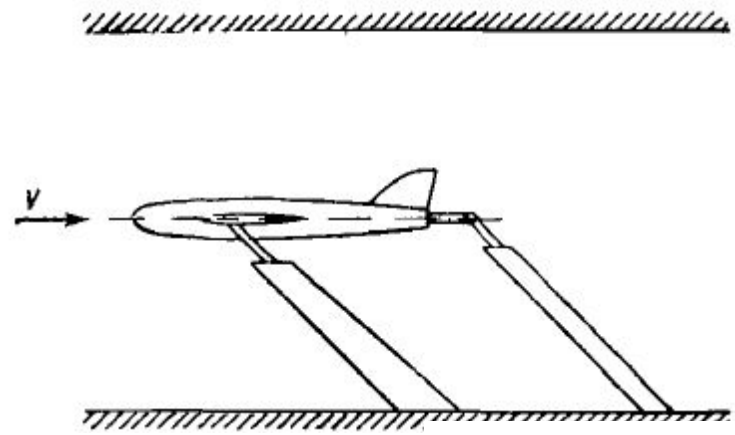

Arrow-type struts.

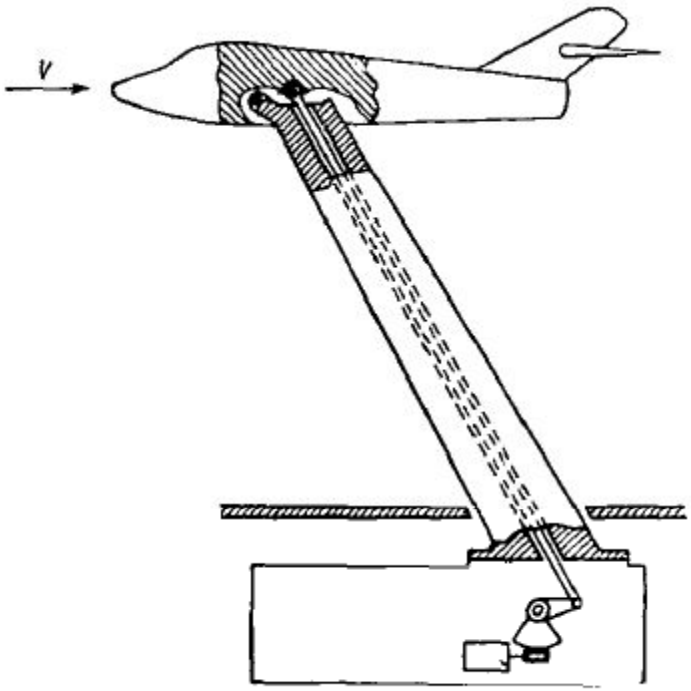

Model fixed to single arrow-type strut

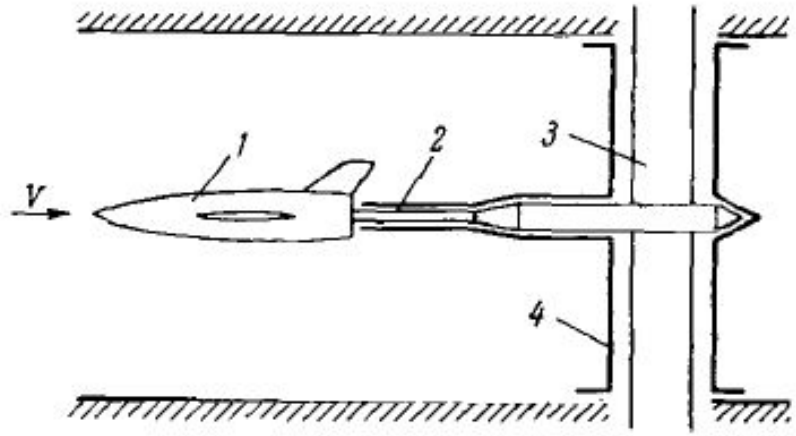

FIGURE 6 27. Cantilever support. 1 — model; 2 — cantilever support; 3 — strut; 4 — shroud.

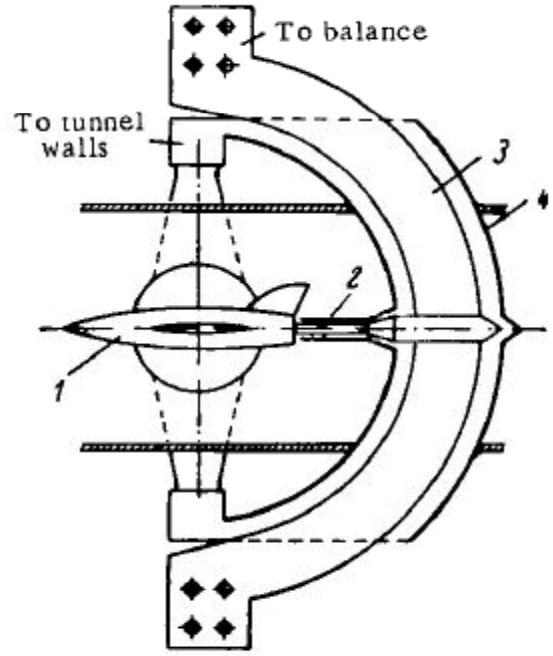

FIGURE 6.28. Semicircular strut. 1 — model; 2 — cantilever support; 3 — semicircular strut; 4 — shroud.

The effect of the model supports and struts

- The components used to support the model obstruct the flow, and cause a general change in velocity and pressure distributions around them; this, in turn, affects the magnitude of the aerodyhamic forces acting on the model. The supports also cause interference with nearby components of the model. Furthermore, the aerodynamic forces acting on the supports are partially transmitted to the wind-tunnel balance used for measuring the aerodynamic forces acting

Strain-Gauge Balance

When strain gauge is used as load sensing element in wind tunnel balance is called Strain-Gauge Balance.Based on the strain gauge fixing on the model, the strain gauge balances are classified as

1. Internal Balance
2. Semi-internal balancef
3. External Balance

Internal Balance

- In internal Balance, all the measuring elements are located inside the model.

Semi-internal balance

- In semi-internal balance the measuring elements are located partially inside and partially outside the model.

External balance

- In an external balance all measuring elements are located outside the balance

Three-component and six component balance

The main characteristic of wind-tunnel balances is the number of measured components. Depending on the problem considered, this number can vary from 1 to 6.

Three-component wind-tunnel balances

- When solving a two-dimensional problem, for instance, for a symmetrical model of an airplane at zero slip angle, three-component balances are used, which measure the lift, the drag, and the pitching moment.
- In this case the balance must have a mechanism permitting only the angle of attack to be changed.

Six-component wind-tunnel balances

- Full-scale tunnels usually have six-component wind-tunnel balances on which the aircraft is installed
- Using six-component balances, the three components of forces, three components of moments are measured

Strain Gauge Operation Theory

- When the bakelite body of the gauge is connected to the surface of the structure, it will stretch or contract with the outer fibers of the structure to which it is attached. The grid wire embedded in the bakelite will stretch or contract with the bakeelite body. As the grid wire are stretched the cross sectional area decreases, causing an increase in electrical resistance. Similarly as the grid wire are compressed their cross-sectional area increases, causing a deacrease in electrical resistance.
- From experience it is found that the change in resistance of the types of strain gauges normally used in wind tunnel balance is directly proportional to the stress in the outer fiber of the structure to which it is attached.
- Fundamental equation for strain gauges are:

$$GF = (\Delta R/R) / (\Delta L/L)$$

where

GF = Gauge Factor,

R = Resistance of strain gauge

L = length of strain gauge

ΔR and ΔL are the change in resistance and length of strain gauge

And $e = \sigma/E = (\Delta L/L)$

Where

E = Yong's modulus

σ = is stress

e = strain

From above two equation

$\sigma = (\Delta R\ E) / (R\ GF)$

Load can be find out after knowing the σ

Calibration of measuring instruments

- Proper calibration of balance is required for interpretation of wind tunnel test result in terms of the desired forces and moment
- The main purpose of calibrating measuring instruments is to establish the dependence between the measured value *t and the indication u of the measuring instrument. The dependence is in most cases linear and for its* determination it is sufficient to find the calibration constant of the instrument, i. e., k=t/u.
- Another purpose of calibration is to determine the accuracy characteristics of the instrument
- In general the calibration comprise the mounting of the balance on a calibration rig outside the tunnel, loading the balance with the known forces and moments which cover the range expected during the test.
- Record all the known applied (t) load and displayed (u) load by the instrument. From this 'linearity' or constant can be find out
- Difference between the gage (instrument) reading with the no load taken before and after a loading is termed as 'gage drift'

- The calibration constant is determined on the basis of *p measurements of ui corresponding to standard values ti (i varies from 1 to p). If the values of ui and ti are plotted, a straight line can be drawn through the experimental points as shown ion fig, whose equation is*

$$u = at + u_0, \qquad \text{where } a = \frac{1}{k}$$

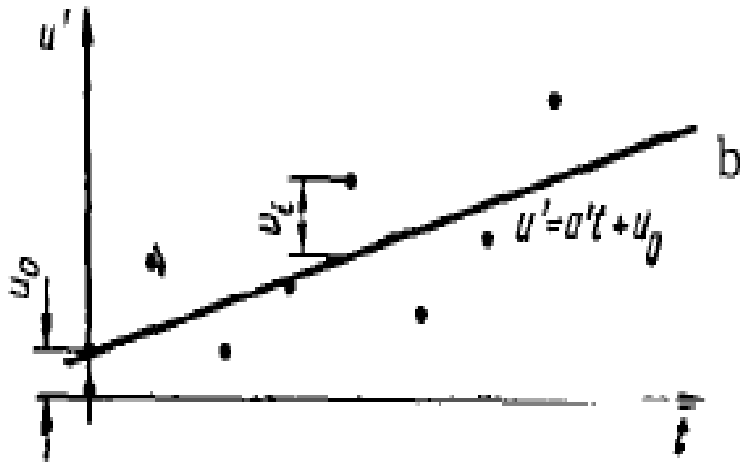

Calibration curves.

- There are basically two types of error (systematic error and random error) found in wind tunnel balance
- The main sources of errors of the wind-tunnel balances are:
  1) Inaccurate assembly of the system for separating the forces into components ;
  2) Displacements and deformations of the links due to variations in load, temperature, and pressure;
  3) Inexact transmission ratios of levers;
  4) Deformation of the model supports.
- These are systematic errors which can be found and eliminated when calibrating the balance. In wind-tunnel balances the most characteristic systematic errors are those expressed by the interaction of the components.
- Random errors are caused mainly by friction in the hinges of the links

Wind tunnel Boundary correction

- Inside the test section there is longitudinal static pressure gradient due to B/L growth and present of the model.
- The variation of static pressure along the test section produces a drag force known as horizontal bouncy. It is present in closed test section but neglected in open jet test section
- Due to the test section wall following blockings are created in test section

Solid Blocking

- Flow pattern is changed around the model due to test section wall. This will cause to increase in dynamic pressure , forces and moments. For open test section this can be neglected

Wake Blocking

- Flow pattern is changed about the wake is known as wake blocking. This effect increase with wake size. For a closed test section wake blocking increases the drag of the model. For open test section this is neglected